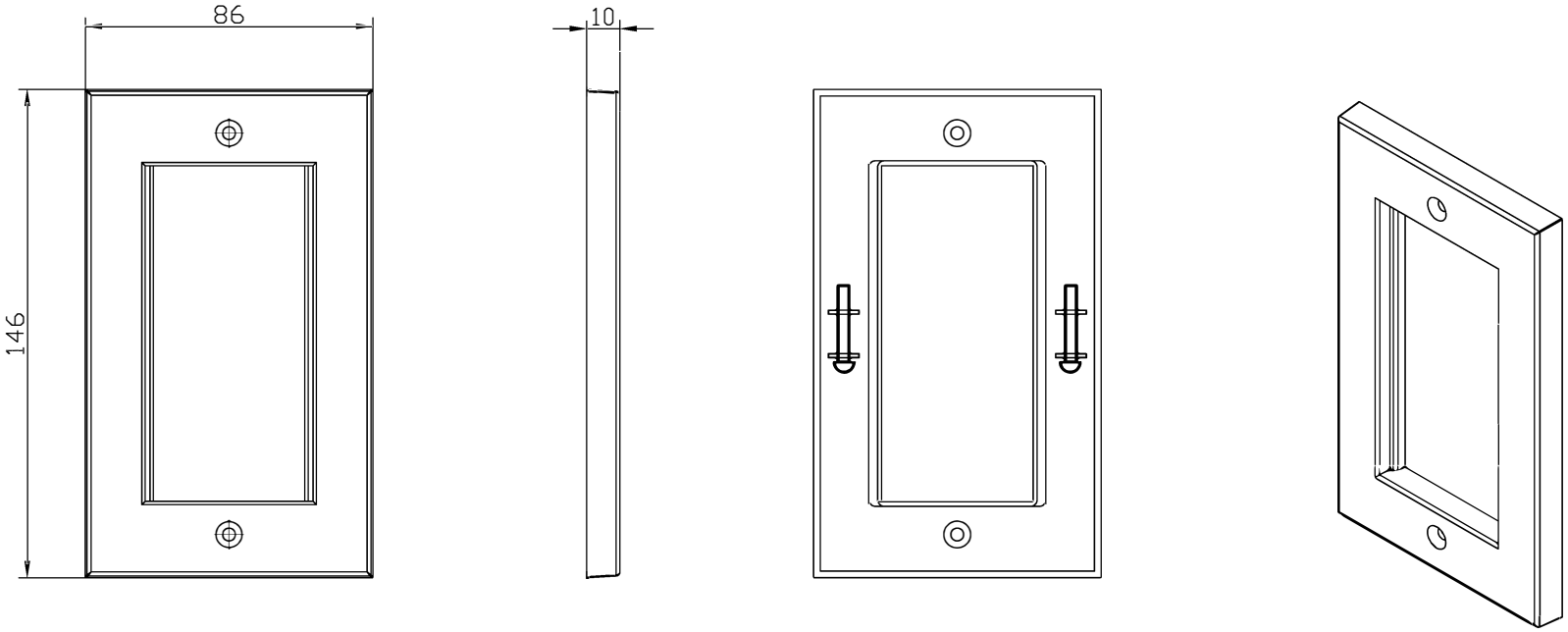

MATERIALS:ABS
COLOR:WHITE
ENCLOSURE:K4 3.5X30mm SCREW X 2

REV.	DESCRIPTION	DATE

Tolerance: X. ±0.5 .X ±0.3 .XX ±0.10	SCALE: FREE	CUSTOMER:			Approved by
	UNIT: mm		CUSTOMER P/N:	COMPANY P/N: ACDFP	Checked by
Angle: X° ±3° .X° ±1°	REV.: 00	SHEET 1/1	DWG. No.:	TITLE: Double Gang 4 Module Flat Plate	Design by